TA677-03 Guide Sign W-Beam Design Information
Transpo Break-Safe Connector

(Send original with requisition; Retain copy for files) *Maintenance Bureau Use* _____

Note: Transpo Connector has no stub

G13-903739
1420510

W-Beam Size: 6x9

Division:3

Contact: Sean Mobley **Phone**: 334.242.6735

Requisition # _____ **PO#** _____ **Line Item:** _____

*Location ID	Route	MP	*Post ID	Position of Post			***Length to Order (upright only)**	^Fuse & Hinge Plate Location	"L" Bracket Selection
				L	C	R	Ft-In	Ft- In	
59sb117.9	59	117.9	001	X	☐	☐	12'-6"	4'-9"	STD.
"	"	"	002	☐	☐	X	12'-6"	4'-9"	STD.
59sb141.7	59	141.7	003	X	☐	☐	14'-6"	5'-3"	STD.
"	"	"	004	☐	☐	X	12'-6"	5'-3"	STD.
59sb144.9	59	144.9	005	X	☐	☐	12'-6"	5'-3"	STD.
"	"	"	006	☐	☐	X	12'-0"	5'-3"	STD.
459nb23.0	459	23.0	007	X	☐	☐	13'-6"	5'-9"	STD.
"	"	"	008	☐	☐	X	14'-6"	5'-9"	STD.
459nb31.8	459	31.8	009	X	☐	☐	12'-0"	3'-9"	STD.
"	"	"	010	☐	☐	X	13'-6"	3'-9"	STD.
59nb142.6	59	142.6	011	X	☐	☐	13'-0"	5'-3"	STD.
"	"	"	012	☐	☐	X	12'-0"	5'-3"	STD.
59nb139.9	59	139.9	013	X	☐	☐	15'-0"	5'-3"	STD.
"	"	"	014	☐	☐	X	12'-6"	5'-3"	STD.
59nb138.8	59	138.8	015	X	☐	☐	12'-6"	3'-3"	STD.
"	"	"	016	☐	☐	X	13'-0"	3'-3"	STD.
59nb121.7	59	121.7	017	X	☐	☐	13'-6"	5'-3"	STD.
"	"	"	018	☐	☐	X	11'-6"	5'-3"	STD.
Total Length This page.							233'-0"	PG. 1	

1

* From ~~Form TA677-01.~~ X-SECTION
^Measured from top of post to Fuse/Hinge connection centerline

TA677-03 Guide Sign W-Beam Design Information
Transpo Break-Safe Connector

(Send original with requisition; Retain copy for files) *Maintenance Bureau Use* _____

Note: Transpo Connector has no stub

W-Beam Size: 6x9

Division: 3

Contact: Sean Mobley **Phone**: 334.242.6735

Requisition # _____ **PO#** _____ **Line Item:** _____

*Location ID	Route	MP	*Post ID	Position of Post			*Length to Order (upright only)	^Fuse & Hinge Plate Location	"L" Bracket Selection
				L	C	R	Ft-In	Ft- In	
65nb233.1	65	233.1	019	X	☐	☐	14'-0"	5'-9"	STD.
"	"	"	020	☐	☐	X	14'-6"	5'-9"	STD.
65nb250.7	65	250.7	021	X	☐	☐	13'-0"	5'-9"	STD.
"	"	"	022	☐	☐	X	13'-6"	5'-9"	STD.
65nb286.5	65	286.5	023	X	☐	☐	14'-0"	5'-9"	STD.
"	"	"	024	☐	☐	X	11'-6"	5'-9"	STD.
20wb141.1	20	141.1	025	X	☐	☐	14'-6"	5'-9"	STD.
"	"	"	026	☐	☐	X	12'-6"	5'-9"	STD.
65sb288.0	65	288.0	027	X	☐	☐	14'-6"	5'-9"	STD.
"	"	"	028	☐	☐	X	12'-0"	5'-9"	STD.
65sb271.0	65	271.0	029	X	☐	☐	15'-0"	5'-9"	STD.
"	"	"	030	☐	☐	X	12'-6"	5'-9"	STD.
65sb263.9	65	263.9	031	X	☐	☐	13'-0"	5'-9"	STD.
"	"	"	032	☐	☐	X	13'-6"	5'-9"	STD.
65sb253.7	65	253.7	033	X	☐	☐	13'-0"	5'-9"	STD.
"	"	"	034	☐	☐	X	12'-6"	5'-9"	STD.
65sb235.0	65	235.0	035	X	☐	☐	14'-0"	5'-9"	STD.
"	"	"	036	☐	☐	X	12'-6"	5'-9"	STD.
Total Length This page.							240'-0"	PG. 2	

473'-0" TOTAL

2

* From ~~Form TA677-01~~ X-SECTION

^Measured from top of post to Fuse/Hinge connection centerline

TA677-03 Guide Sign W-Beam Design Information
Transpo Break-Safe Connector

(Send original with requisition; Retain copy for files) *Maintenance Bureau Use* _____

Note: Transpo Connector has no stub

W-Beam Size: 6x12___"L" Bracket No. 1

Division: 3

Contact: Sean Mobley **Phone**: 334.242.6735

Requisition # _____ **PO#** _____ **Line Item:** _____

*Location ID	Route	MP	*Post ID	Position of Post			***Length to Order (upright only)**	^Fuse & Hinge Plate Location	"L" Bracket Selection
				L	C	R	Ft-In	Ft- In	
59nb135.9	59	135.9	001	X	☐	☐	14'-6"	7'-3"	1
"	"	"	002	☐	☐	X	17'-0"	7'-3"	1
59nb112.3	59	112.3	003	X	☐	☐	15'-6"	7'-3"	1
"	"	"	004	☐	☐	X	17'-0"	7'-3"	1
65nb269.6	65	269.6	005	X	☐	☐	15'-0"	5'-9"	1
"	"	"	006	☐	☐	X	12'-0"	5'-9"	1
20wb138.6	20	138.6	007	X	☐	☐	14'-6"	7'-3"	1
"	"	"	008	☐	X	☐	16'-6"	7'-3"	1
"	"	"	009	☐	☐	X	18'-6"	7'-3"	1
20wb140.6	20	140.6	010	X	☐	☐	19'-0"	5'-9"	1
"	"	"	011	☐	☐	X	16'-0"	5'-9"	1
65sb282.4	65	282.4	012	X	☐	☐	17'-0"	9'-9"	1
"	"	"	013	☐	☐	X	18'-0"	9'-9"	1
459sb25.0	459	25.0	014	X	☐	☐	14'-6"	5'-9"	1
"	"	"	015	☐	☐	X	17'-0"	5'-9"	1
				☐	☐	☐			
				☐	☐	☐			
				☐	☐	☐			
Total Length This page.							242'-0"		

(3)

* From ~~Form TA677-01~~ X-SECTION

^Measured from top of post to Fuse/Hinge connection centerline

TA677-03 Guide Sign W-Beam Design Information
Transpo Break-Safe Connector

(Send original with requisition; Retain copy for files) *Maintenance Bureau Use* _____

Note: Transpo Connector has no stub

W-Beam Size: 6x12__"L" Bracket No. 2

Division: 3

Contact: Sean Mobley **Phone**: 334.242.6735

Requisition # _____ **PO#** _____ **Line Item:** _____

*Location ID	Route	MP	*Post ID	Position of Post			*Length to Order (upright only)	^Fuse & Hinge Plate Location	"L" Bracket Selection
				L	C	R	Ft-In	Ft- In	
20eb139.2	20	139.2	001	X	☐	☐	14'-6"	5'-9"	2
"	"	"	002	☐	☐	X	14'-0"	5'-9"	2
65sb264.1	65	264.1	003	X	☐	☐	14'-0"	5'-9"	2
"	"	"	004	☐	☐	X	15'-0"	5'-9"	2
				☐	☐	☐			
				☐	☐	☐			
				☐	☐	☐			
				☐	☐	☐			
				☐	☐	☐			
				☐	☐	☐			
				☐	☐	☐			
				☐	☐	☐			
				☐	☐	☐			
				☐	☐	☐			
				☐	☐	☐			
				☐	☐	☐			
				☐	☐	☐			
				☐	☐	☐			
Total Length This page.							57'-6"		

4

* From ~~Form TA677-01~~ X-SECTION

^Measured from top of post to Fuse/Hinge connection centerline

TA677-03 Guide Sign W-Beam Design Information
Transpo Break-Safe Connector

(Send original with requisition; Retain copy for files) *Maintenance Bureau Use* _____

Note: Transpo Connector has no stub

W-Beam Size: 6x15__"L" Bracket No.1

Division: 3

Contact: Sean Mobley **Phone**: 334.242.6735

Requisition # _____ **PO#** _____ **Line Item:** _____

*Location ID	Route	MP	*Post ID	Position of Post			*Length to Order (upright only)	^Fuse & Hinge Plate Location	"L" Bracket Selection
				L	C	R	Ft-In	Ft- In	
459sb33.0	459	33.0	001	X	☐	☐	18'-6"	9'-9"	1
"	"	"	002	☐	☐	X	21'-0"	9'-9"	1
459sb25.1	459	25.1	003	X	☐	☐	20'-6"	11'-9"	1
"	"	"	004	☐	☐	X	22'-6"	11'-9"	1
459nb22.7	459	22.7	005	X	☐	☐	19'-6"	11'-9"	1
"	"	"	006	☐	☐	X	21'-0"	11'-9"	1
65nb280.9	65	280.9	007	X	☐	☐	17'-6"	9'-9"	1
"	"	"	008	☐	☐	X	16'-6"	9'-9"	1
20wb140.9	20	140.9	009	X	☐	☐	20'-0"	9'-9"	1
"	"	"	010	☐	☐	X	17'-0"	9'-9"	1
20eb139.6	20	139.6	011	X	☐	☐	18'-6"	9'-9"	1
"	"	"	012	☐	☐	X	18'-0"	9'-9"	1
				☐	☐	☐			
				☐	☐	☐			
				☐	☐	☐			
				☐	☐	☐			
				☐	☐	☐			
				☐	☐	☐			
Total Length This page.							230'-6"		

5

* From ~~Form TA677-01~~ X-SECTION

^Measured from top of post to Fuse/Hinge connection centerline

PARTS LIST

ITEM	DESCRIPTION	SIZE/SPECIFICATIONS	QTY/ POST	PART NUMBER
1	Bracket, Type AI6	6061-T6 Aluminum	2	SBAK6117
2	Bracket Hardware Assembly, Type AI6, includes:		1	SB-AI6H
2a	Bolt	12.7mm(1/2")-13UNCx57.2mm(2-1/4"), Hex Head, ASTM A325, Galv. ASTM A153	8	
2b	LockWasher	12.7mm(1/2"), ANSI B18-21-1, Galv. ASTM A153	8	
2c	Nut	12.7mm(1/2")-13UNC, Heavy Hex, ASTM A563 Gr. DH, Galv. ASTM A153	8	
3	Coupling & Special Bolt Assembly, Type A, includes:		1	SB-CALP
3a	Special Bolt	15.9mm(5/8")-11UNC, ASTM A449, Galv. ASTM A153/B695	4	
3b	Coupling	15.9mm(5/8")-11UNC, LP, AMS 6378D, Galv. ASTM A153, Polyester Coat	4	
3c	Shim	15.9mm(5/8") Horseshoe, 14 Gauge, Galv. Steel Sheet	2	
3d	Shim	15.9mm(5/8") Horseshoe, 18 Gauge, Galv. Steel Sheet	2	
4	Hinge Assembly, Type A, includes:		1	SB-HB3
4a	Hinge Plate	Type A, AISI 4130 Steel, Galv. ASTM A123	4	
5	Hinge Hardware Assembly, Type A, includes:		1	SB-HHA
5a	Bolt	12.7mm(1/2")-13UNCx37.2mm(1-1/2"), Hex Head, ASTM A325, Galv. ASTM A153	8	
5b	LockWasher	12.7mm(1/2"), ANSI B18-21-1, Galv. ASTM A153	8	
5c	Nut	12.7mm(1/2")-13UNC, Heavy Hex, ASTM A563 Gr. DH, Galv. ASTM A153	8	
6	Anchor Assembly, Type A, includes:		1	SBAAPK
6a	Anchor	15.9mm(5/8")-11UNC, 304 S.S. Ferrule, AISI 1045 Rod, AISI 1008 Coil	4	

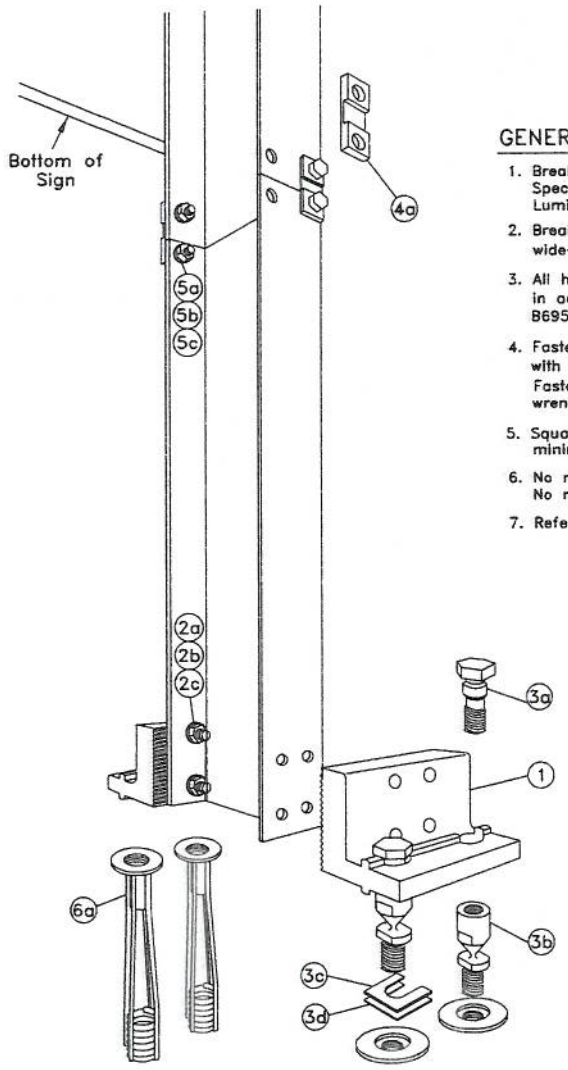

GENERAL NOTES:

1. Break-Safe meets all requirements of "AASHTO Standard Specifications for Structural Supports for Highway Signs, Luminaires and Traffic Signals."
2. Break-Safe Model AI6 is designed to fit W150x14 (W6x9) wide-flange steel I-Beam signposts.
3. All hardware items are American Standard sizes, galvanized in accordance with ASTM A153 (hot dipped) or ASTM B695 (mechanically applied).
4. Fasteners, except for special bolt and coupling, are installed with lockwashers, and do not have specific torque requirements. Fasteners should be secured as tight as possible with conventional wrenches, unless noted otherwise.
5. Square-up and level individual components, particularly Anchors to minimize the need for shimming between the Couplings and Anchors.
6. No more than two shims shall be placed under any one coupling. No more than three shims underneath any pair of couplings.
7. Refer to other side of page for complete installation instructions.

Patent Nos. 4,528,786 and 5,596,845

Break-Safe Model AI6

Breakaway Support System for Sign Posts

Scale: Not To Scale	*Date: July 2000*
Drawing No. BS-AI6-1	*Sheet: 1 of 2*

Page 7

6

INSTALLATION INSTRUCTIONS

ANCHOR ASSEMBLY:

Note: Precise positioning of the anchors is critical to proper assembly of the system. It is recommended that actual posts be used to locate the correct postion of the anchors.

1. Fabricate a flat, rigid template with four (4) 16mm (5/8") diameter holes located to match the specified anchor pattern of the Break-Safe Brackets attached to the signpost. See diagram below.
2. Attach four (4) Type A Female Anchors to the template using four (4) 16mm (5/8") diameter bolts. Ensure that each Anchor Washer is snug against the bottom of the template.
3. Lower Anchor Assembly into fresh concrete foundation, and vibrate into position such that the tops of the Anchor Washers are flush with the finished top surface of the foundation. Support the template such that all Anchors are level and in their proper locations.
4. Allow concrete to cure, and then remove the bolts and template from the top of the foundation.

HINGE ASSEMBLY:

1. Butt upper and lower post sections together on a flat surface.
2. Drill eight (8) 14.3mm (9/16") holes in the flanges of the post sections as shown.
3. Place Hinge Plates on outer surface of the post flanges and secure with bolts, lock washers, and nuts. Ensure that upper and lower post sections are in alignment, and then tighten all nuts 1/2 turn beyond snug.

BRACKET ASSEMBLY:

1. Drill eight (8) 14.3mm (9/16") diameter holes in the flanges of the lower post section as shown.
2. Place Brackets squarely on outer surface of the post flanges, and secure with bolts, lock washers, and nuts. Then, tighten all 1/2 turn beyond snug.

COUPLING ASSEMBLY:

1. Thread four (4) Break-Safe Couplings into Anchors. Do not tighten.
2. Suspend post assembly over foundation, insert Special Bolts through holes in the Brackets, and thread them snug into the Couplings.
3. If post is not plumb, insert Shims (14g and/or 18g) between the Couplings and Anchors, where needed.
4. Use lower wrench flats to tighten Couplings into Anchors as tight as possible using a convensional wrench. Do not use a pipe wrench. Couplings must be seated squarely.
5. Tighten Special Bolts while holding Couplings by the upper wrench flats with an additional wrench to prevent an induced torque stress across the necked portion of the Coupling. All Special Bolts shall also be tightened as tight as possible using convensional wrenches.

SIGN PANEL ASSEMBLY:

1. After all signposts are secured in place, attach sign panel assembly to posts in accordance with the sign manufacturer's recommendations.

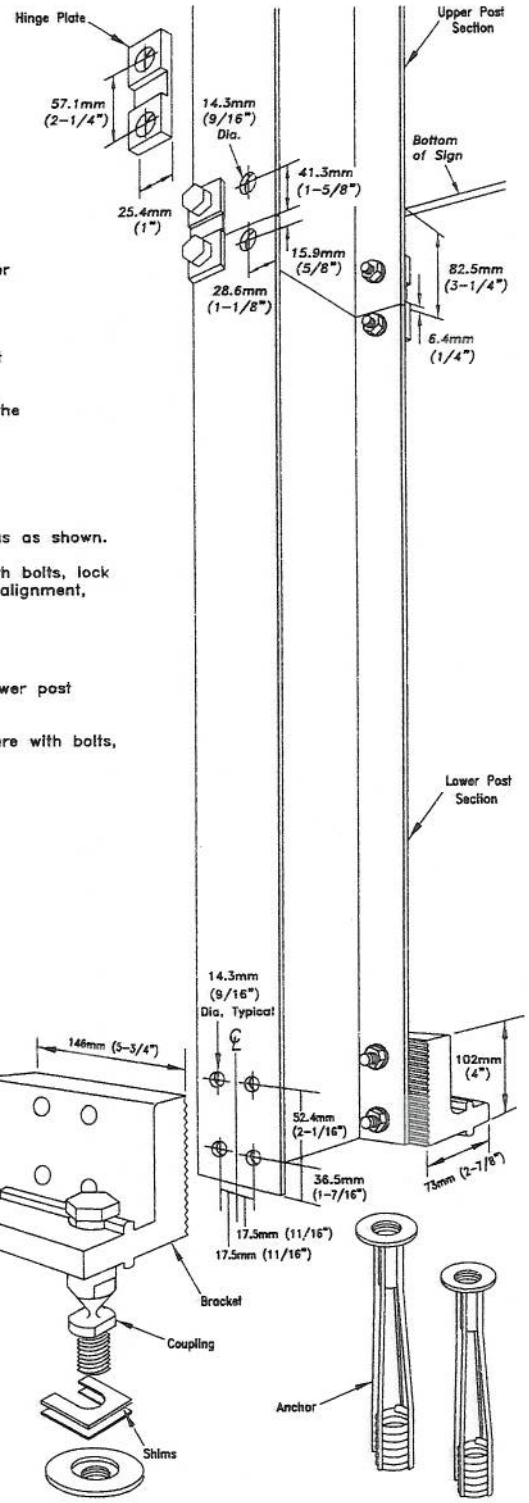

PLAN VIEW OF TYPICAL FOUNDATION

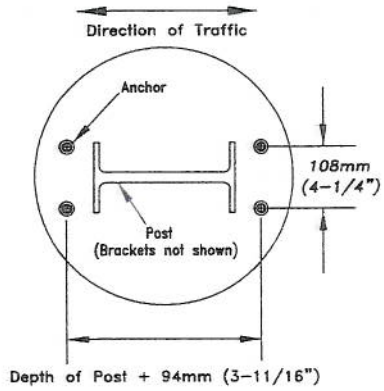

Patent Nos. 4,528,786 and 5,596,845

Break-Safe Model AI6	
Breakaway Support System for Sign Posts	
Scale: Not To Scale	Date: May 2007
Drawing No. BS-AI6-2	Sheet: 2 of 2

7

PARTS LIST

ITEM	DESCRIPTION	SIZE/SPECIFICATIONS	QTY/ POST	PART NUMBER
1	Bracket, Type B525	6061-T6 Aluminum (see Bracket Selection Table for -Number)	2	SBBK525-1A,-2A,-3A
2	Bracket Hardware Assembly, Type B525, includes:		1	SB-B525LPH
2a	Bolt	12.7mm(1/2")-13UNCx63.5mm(2-1/2"), Hex Head, ASTM A325, Galv. ASTM A153	4	
2b	Bolt	12.7mm(1/2")-13UNCx69.8mm(2-3/4"), Hex Head, ASTM A325, Galv. ASTM A153	4	
2c	Bolt	12.7mm(1/2")-13UNCx76.2mm(3"), Hex Head, ASTM A325, Galv. ASTM A153	4	
2d	Cap Screw	12.7mm(1/2")-13UNCx31.7mm(1-1/4"), Hex Head, ASTM A307, Galv. ASTM A153	4	
2e	LockWasher	12.7mm(1/2"), ANSI B18-21-1, Galv. ASTM A153	16	
2f	Nut	12.7mm(1/2")-13UNC, Heavy Hex, ASTM A563 Gr. DH, Galv. ASTM A1531	12	
3	Coupling & Special Bolt Assembly, Type B, includes:		1	SB-CBLP
3a	Special Bolt	25.4mm(1")-8UNC, ASTM A449, Galv. ASTM A153/B695	4	
3b	Coupling	25.4mm(1")-8UNC, LP, AMS 6378D, Galv. ASTM A153, Polyester Coat	4	
3c	Shim	25.4mm(1") Horseshoe, 14 Gauge, Galv. Steel Sheet	2	
3d	Shim	25.4mm(1") Horseshoe, 18 Gauge, Galv. Steel Sheet	2	
4	Hinge Assembly, Type B525, includes:		1	SB-HB1
4a	Hinge Plate	Type B525, AISI 4130 Steel, Galv. ASTM A123	4	
5	Hinge Hardware Assembly, Type B, includes:		1	SB-HHB
5a	Bolt	19.0mm(3/4")-10UNCx57.1mm(2-1/4"), Hex Head, ASTM A325, Galv. ASTM A153	8	
5b	LockWasher	19.0mm(3/4"), ANSI B18-21-1, Galv. ASTM A153	8	
5c	Nut	19.0mm(3/4")-10UNC, Heavy Hex, ASTM A563 Gr. DH, Galv. ASTM A153	8	
6	Anchor Assembly, Type B, includes:		1	SBABPK
6a	Anchor	25.4mm(1")-8UNC, 304 S.S. Ferrule, AISI 1045 Rod, AISI 1008 Coil	4	

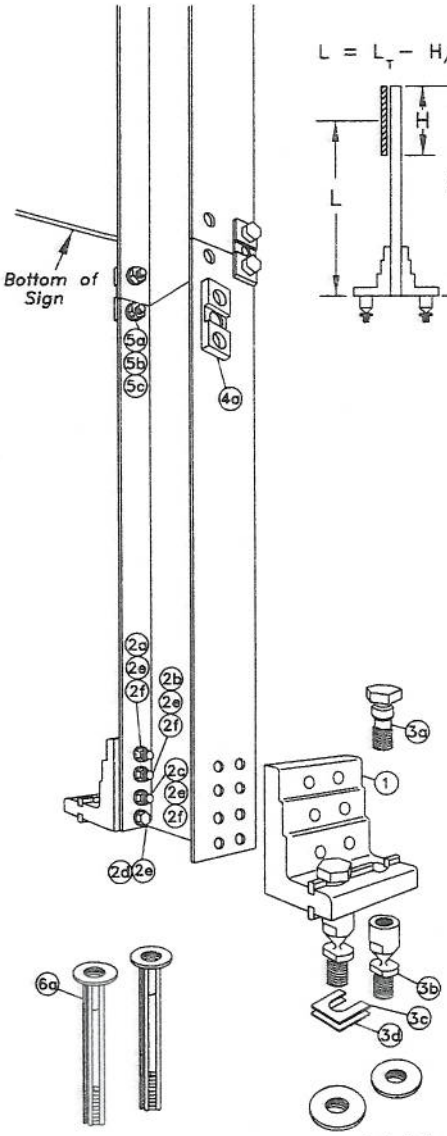

$L = L_T - H/2$

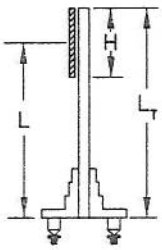

BRACKET SELECTION TABLE

Select correct Break-Safe bracket number from table, using 'L' value from the longest post. Use figure to the left to determine 'L'.

POST SIZE	BRACKET No. 1		BRACKET No. 2		BRACKET No. 3	
	Min. 'L'	Max. 'L'	Min. 'L'	Max. 'L'	Min. 'L'	Max. 'L'
152mm (6")	3.6m(12')	8.8m(29')	2.7m(9')	3.6m(12')	0	2.7m(9')
203mm (8")	4.3m(14')	8.8m(29')	3.0m(10')	4.3m(14')	0	3.0m(10')

GENERAL NOTES:

1. Break-Safe meets all requirements of "AASHTO Standard Specifications for Structural Supports for Highway Signs, Luminaires and Traffic Signals."
2. Break-Safe Model B525 is designed to fit 150mm (6") and 200mm (8") Wide Flange I-Beam, and 127mm (5") and 150mm (6") Square Tube signposts.
2. Select proper Bracket Number by referring to Bracket Selection Table.
3. All hardware items are American Standard sizes, galvanized in accordance with ASTM A153 (hot dipped) or ASTM B695 (mechanically applied).
4. Fasteners, except for special bolt and coupling, are installed with lockwashers, and do not have specific torque requirements. Fasteners should be secured as tight as possible with conventional wrenches, unless noted otherwise.
5. Square-up and level individual components, particularly Anchors to minimize the need for shimming between the Couplings and Anchors.
6. No more than two shims shall be placed under any one coupling. No more than three shims underneath any pair of couplings.
7. Refer to other side of page for complete installation instructions.

Patent Nos. 4,528,786 and 5,596,845

Break-Safe Model B525

Breakaway Support System for Sign Posts

Scale: Not To Scale	Date: July 2000
Drawing No. BS-B525-1, -2, -3	Sheet: 1 of 2

INSTALLATION INSTRUCTIONS

ANCHOR ASSEMBLY:

Note: Precise positioning of the anchors is critical to proper assembly of the system. It is recommended that actual posts be used to locate the correct postion of the anchors.

1. Determine proper Break-Safe Bracket Number from the Bracket Selection Table. All posts within a sign structure shall use the same Bracket Number, determined by the length of the longest post.
2. Fabricate a flat, rigid template with four (4) 25mm (1") diameter holes located to match the specified anchor pattern of the Break-Safe Brackets attached to the signpost. See diagram below.
3. Attach four (4) Type B Female Anchors to the template using four (4) 25mm (1") diameter bolts. Ensure that each Anchor Washer is snug against the bottom of the template.
4. Lower Anchor Assembly into fresh concrete foundation, and vibrate into position such that the tops of the Anchor Washers are flush with the finished top surface of the foundation. Support the template such that all Anchors are level and in their proper locations.
5. Allow concrete to cure, and then remove the bolts and template from the top of the foundation.

HINGE ASSEMBLY:

1. Butt upper and lower post sections together on a flat surface.
2. Drill eight (8) 20.6mm (13/16") holes in the flanges of the post sections as shown.
3. Place Hinge Plates on outer surface of the post flanges and secure with bolts, lock washers, and nuts. Ensure that upper and lower post sections are in alignment, and then tighten all nuts 1/2 turn beyond snug.

BRACKET ASSEMBLY:

1. Drill sixteen (16) 14.3mm (9/16") diameter holes in the flanges of the lower post section as shown.
2. Place Brackets squarely on outer surface of the post flanges, and secure with bolts, lock washers, nuts, and cap screws. Then, tighten all 1/2 turn beyond snug.

COUPLING ASSEMBLY:

1. Thread four (4) Break-Safe Couplings into Anchors. Do not tighten.
2. Suspend post assembly over foundation, insert Special Bolts through holes in the Brackets, and thread them snug into the Couplings.
3. If post is not plumb, insert Shims (14g and/or 18g) between the Couplings and Anchors, where needed.
4. Use lower wrench flats to tighten Couplings into Anchors as tight as possible using a conventional wrench. Do not use a pipe wrench. Couplings must be seated squarely.
5. Tighten Special Bolts while holding Couplings by the upper wrench flats with an additional wrench to prevent an induced torque stress across the necked portion of the Coupling. All Special Bolts shall also be tightened as tight as possible using conventional wrenches.

SIGN PANEL ASSEMBLY:

1. After all signposts are secured in place, attach sign panel assembly to posts in accordance with the sign manufacturer's recommendations.

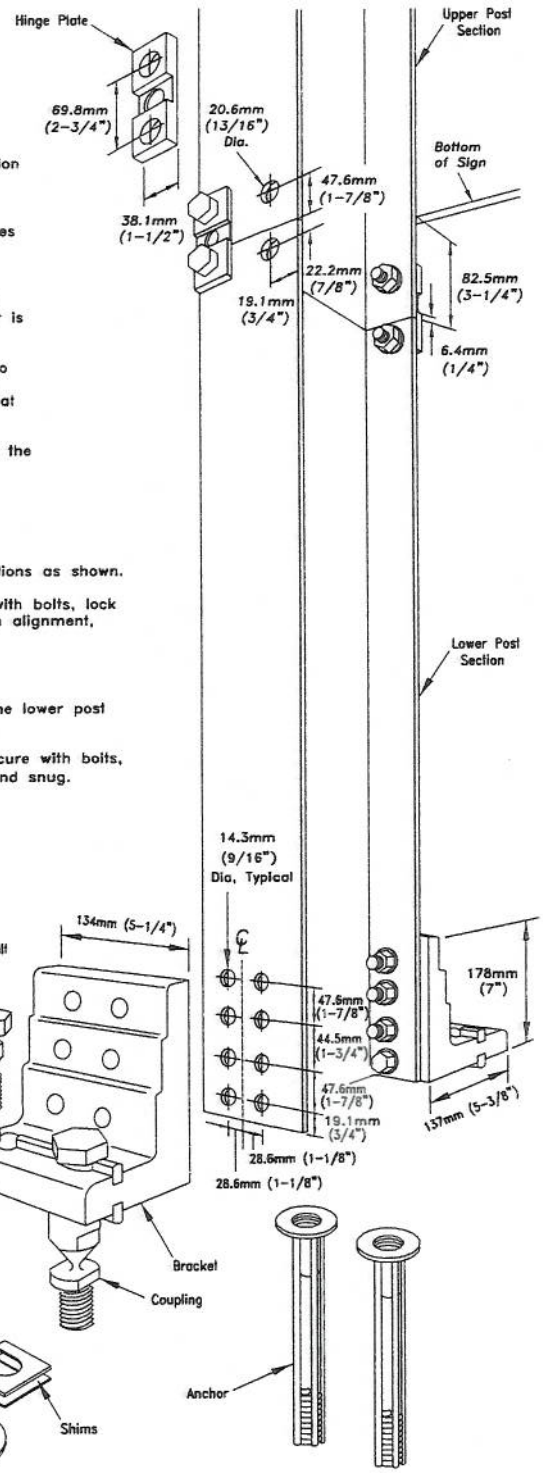

PLAN VIEW OF TYPICAL FOUNDATION

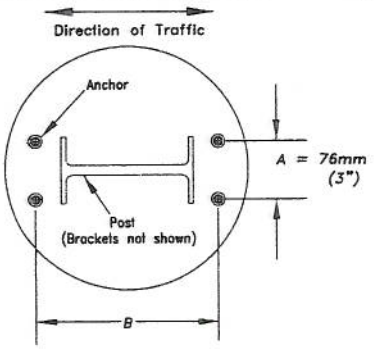

B (Bracket No. 1) = Depth of Post + 202mm (7-15/16")
B (Bracket No. 2) = Depth of Post + 205mm (8-1/16")
B (Bracket No. 3) = Depth of Post + 207mm (8-1/8")

Patent Nos. 4,528,786 and 5,596,845

Break-Safe Model B525	
Breakaway Support System for Sign Posts	
Scale: Not To Scale	Date: July 2000
Drawing No. BS-B525-1, -2, -3	Sheet: 2 of 2

Page 18